Optics Bench System

User's Guide

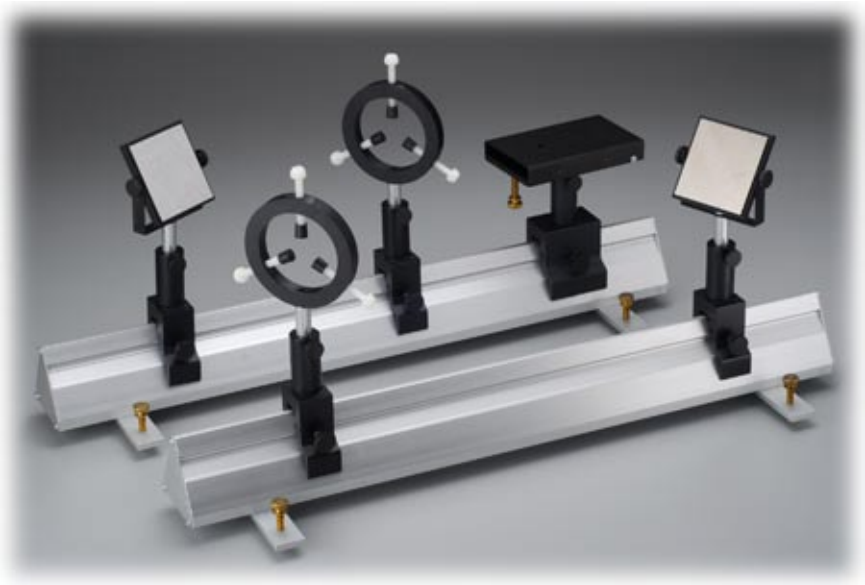

Model Numbers:

45-225

45-226

INDUSTRIAL FIBER OPTICS

*

Revision - E

Printed in the United States of America

* * *

* * * * *

INTRODUCTION

This manual provides information about the Optics Bench System that was formerly manufactured by Metrologic, Inc. It contains all the information needed to assemble and set up the Optics Bench System, even if you are a novice to optical technology. Please read the manual carefully before operating the Optics Bench System.

As soon as you receive this Optics Bench System, inspect it and the shipping container for damage. If any damage is found, immediately refer to the section of this manual entitled Shipment Damage Claims.

Industrial Fiber Optics makes every effort to incorporate state-of-the-art technology, highest quality and dependability in its products. We constantly explore new ideas and products to best serve the rapidly expanding needs of industry and education. We encourage comments that you may have about our products, and we welcome the opportunity to discuss new ideas that may better serve your needs. For more information about our company and products refer to http// www.i-fiberoptics.com on the Worldwide Web.

Thank you for selecting this Industrial Fiber Optics product. We hope it meets your expectations and provides many hours of productive activity.

Sincerely,

The Industrial Fiber Optics Team

TABLE OF CONTENTS

USING THE OPTICS BENCH SYSTEM

General

Industrial Fiber Optics offers a research-grade optics bench system designed for economy and interchangeability. For economy, we offer only the components that sell for the highest value (hence, lowest cost). For interchangeability, components from most other optics bench systems will fit on the ¼" – 20 TPI threads on the Industrial Fiber Optics mounting pins.

Consider the system in four levels as diagrammed below:

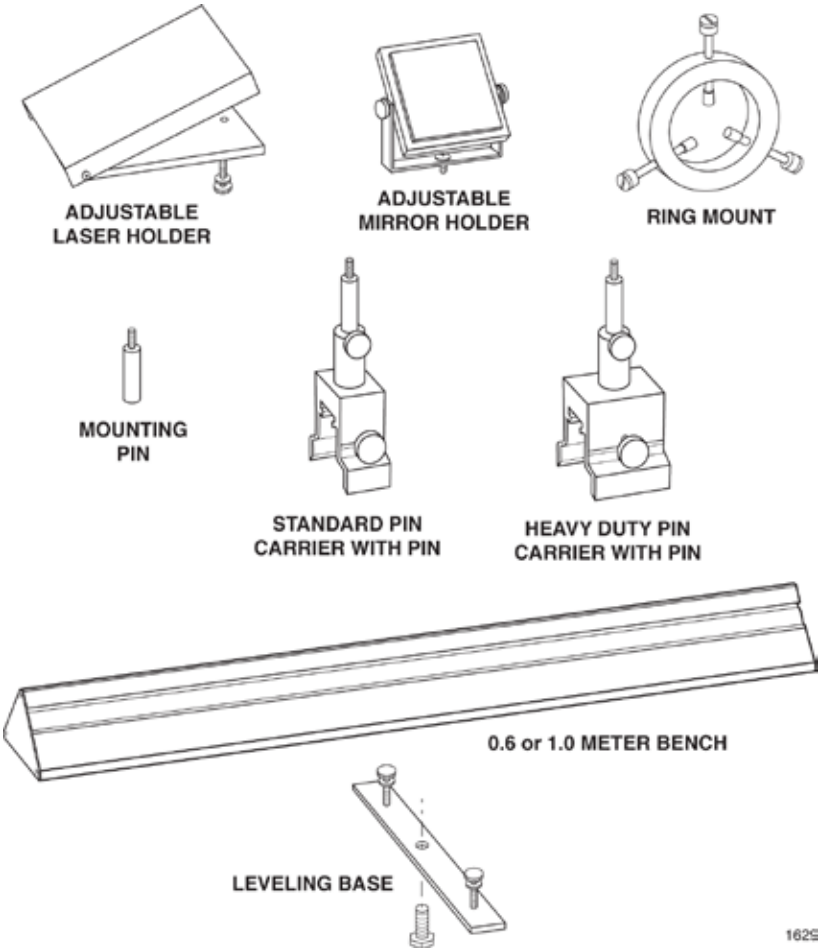

Figure 1. Parts for the Optics Bench System

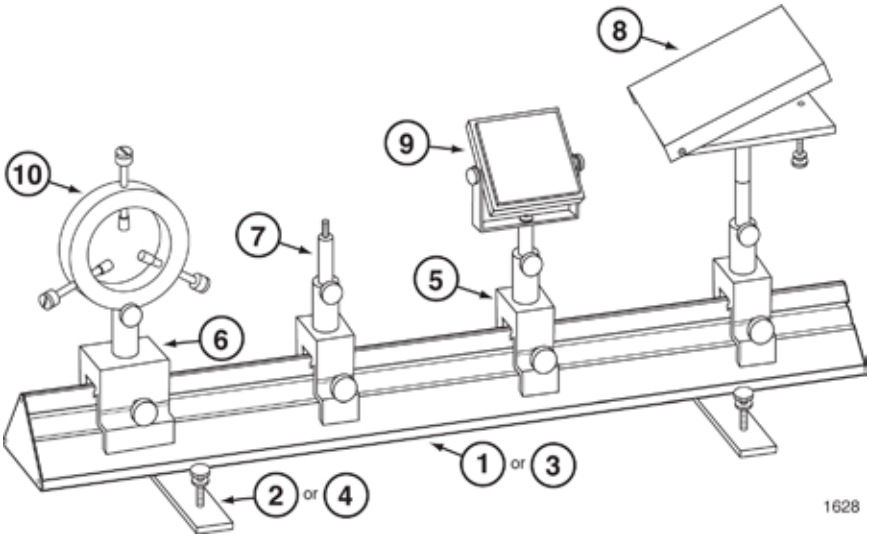

Figure 2. Assembled Optics Bench System

45-225 Optics Bench Parts List

#	QTY	PART #	DESCRIPTION
1*	2	45-202	0.6 Meter Benches
2*	1	45-221	Leveling Base Set for two 0.6 Meter Benches
3**	1	43-201	1.0 Meter Bench
4**	1	45-222	Leveling Base Set for 1.0 Meter Bench
5	4	45-212	Standard Pin Carriers with Pins
6	1	45-214	Heavy Duty Pin Carrier with Pin
7	3	45-124	Mounting Pins (purchased separately)
8	1	45-208	Adjustable Laser Holder
9	2	45-209	Adjustable Mirror Holders
10	2	45-122	Ring Mounts

* Included in 45-225

** Included in 45-226

Each component may be purchased separately.

45-209 Adjustable Mirror Holder

The mirror holder has a 75 mm square mounting plate, which rotates 360° around a horizontal axis. A 70 mm square front surface aluminized and overcoated mirror is supplied. The mirror may be attached to the tilt plate if desired. Alternately, the tilt plate may be drilled to various diameters to serve as a lens holder.

Parts

1 Tilt plate assembly: Consists of a 75 mm square aluminum plate attached to a U-shaped bracket by the two thumb screws.

1 Front surface mirror: 70 mm square

1 Machine screw: ¼" – 20 x 3/8"

Assembly

Attach U-shaped bracket to the mounting pin by inserting ¼" – 20 machine screw through the clearance hole in the U-shaped bracket and into the ¼" – 20 socket on the mounting pin. The mirror may be attached to the tilt plate by peeling off the backing on the adhesive.

45-122 Ring Mount

The ring mount has a 70 mm inside diameter and is intended for holding optical or mechanical components up to 50 mm in diameter. Three cushioned thumb screws permit precise positioning. When used in pairs, the ring mounts provide an excellent holder for cylindrical lasers.

Part and Assembly

The ring mount is shipped fully assembled. Insert mounting pin into the ¼" – 20 socket on the ring assembly.

45-212 Standard Pin Carrier
45-214 Heavy Duty Pin Carrier

Each carrier fits on top of the triangular bench and may be locked in place with a thumb screw. The standard pin carrier has one 30 mm base, good for close positioning. The heavy duty pin carrier has a 60mm base, appropriate for supporting lasers and heavy objects. A 60 mm tall aluminum mounting pin is supplied with each pin carrier. The pins have ¼" – 20 male threads at one end and ¼" – 20 female threads at the other. Pins may be joined to provide additional height.

Parts and Assembly

Pin carriers come fully assembled. Each consists of a carrier base with two thumb screws and a mounting pin with a removable ¼" – 20 x 5/8" set screw.

45-124 Mounting Pins (set of three – may be purchased separately)

This is a set of three mounting pins, each 60 mm tall, which may be joined to the pins supplied with the pin carriers for extended height applications.

45-208 Adjustable Laser Holder

The Laser Holder has an 80 x 125 mm surface area, which tilts –10° to +30° from horizontal. A thumb screw provides fine adjustment for tilt. This holder can also serve as a leveling table for prisms and other optical components.

Parts

1 Table assembly: Consists of a U-shaped mounting plate attached to a base plate

1 Machine screw: ¼" – 20 x ¼"

1 Thumb screw: ¼" – 20 x 2"

Assembly

Screw mounting pin into the ¼" – 20 threaded hole in the center of the base plate. Insert the thumb screw in the threaded hole at end of the base plate. Attach laser by using ¼" – 20 machine screw through the clearance hole on tilt plate.

45-202 Standard Bench (0.6 meters)
45-201 Long Bench (1.0 meters)

Industrial Fiber Optics optics benches employ world-standard Zeiss Triangular design. The benches are hollow aluminum extrusions guaranteed straight to within 1 mm per meter. The base of the bench contains a threaded slot so that the bench can be connected to leveling bases or bolted directly to a table, if desired.

Parts (for each bench)

1 Bench

2 End plates

6 Screws: 6-32 x 5/16" self tapping

Assembly

Each end plate is fastened by inserting three screws through holes in the end plate and into grooves in the bench extrusion.

If a heavyweight bench is desired, fasten one end plate, fill the hollow bench with dry sand, and fasten the second end plate.

45-221 Leveling Base Set (for two 0.6 meter benches)
45-222 Leveling Base Set (for 1.0 meter bench)

When several triangular benches are being used, it is sometimes useful to level the individual benches. The Leveling Base Set consists of four bars (to level two benches) or two bars (to level a single bench) and hardware.

Parts (for each bench)

2 Leveling bars: (approximately 25 x 175 mm)

4 Thumb screws: ¼" – 20 x 2"

2 Bolts: 3/8" x 16 x 7/8"

Assembly

Screw the thumb screws into the holes at the ends of each leveling bar. Attach the bar to the triangular bench by inserting the bolt through the bar into the threaded channel at the base of the bench.

WARRANTY

The Industrial Fiber Optics 45-225 Optical Bench System is warranted against defects in materials and workmanship for two years. The warranty will be voided if the Bench System components have been damaged or mishandled by the buyer.

Industrial Fiber Optics' warranty liability is limited to repair or replacement of any defective unit at the company's facilities, and does not include attendant or consequential damages. Repair or replacement may be made only after failure analysis at the factory. Authorized warranty repairs are made at no charge, and are guaranteed for the balance of the original warranty.

Industrial Fiber Optics will pay the return freight and insurance charges for warranty repair within the continental United States by United Parcel Service or Parcel Post. Any other delivery means must be paid for by the customer.

The costs of return shipments for equipment no longer under warranty must be paid by the customer. If an item is not under warranty, repairs will not be undertaken until the cost of such repairs has been approved, in writing, by the customer. Typical repair costs range from $75 - $250 and repairs usually take two to three weeks to complete.

When returning items for analysis and possible repair, please do the following:

- In a letter, describe the problem, person whom we should contact, phone number and return address.
- Pack the unit and your letter carefully in a strong box with adequate packing material, to prevent damage in shipment.
- Ship the package to:

NDUSTRIAL FIBER OPTICS
1725 WEST 1ST STREET
TEMPE, AZ 85281-7622
USA

If you would like to view our products on the Internet go to: **www.i-fiberoptics.com**

SHIPMENT DAMAGE CLAIMS

If damage to an Industrial Fiber Optics product should occur during shipping, it is imperative that it be reported immediately, both to the carrier and the distributor or salesperson from whom the item was purchased. DO NOT CONTACT INDUSTRIAL FIBER OPTICS.

Time is of the essence because damage claims submitted more than five days after delivery may not be honored. If shipping damage has occurred during shipment, please do the following:

- Make a note of the carrier company, the name of the carrier employee, the date and the time of the delivery.
- Keep all packing material.
- In writing, describe the nature of damage to the product.
- In cases of severe damage, do not attempt to use the product (including attaching it to a power source).
- Notify the carrier immediately of any damaged product.
- Notify the distributor from whom the purchase was made.

NOTES:

NOTES:

Rules for Laser Safety

- Lasers produce a very intense beam of light. Treat them with respect. Most educational lasers have an output of less than 3 milliwatts, and will not harm the skin.
- Never look into the laser aperture while the laser is turned on! PERMANENT EYE DAMAGE COULD RESULT.
- Never stare into the oncoming beam. Never use magnifiers (such as binoculars or telescopes) to look at the beam as it travels – or when it strikes a surface.
- Never point a laser at anyone's eyes or face, no matter how far away they are.
- When using a laser in the classroom or laboratory, always use a beam stop, or project the beam to areas, which people won't enter or pass through.
- Never leave a laser unattended while it is turned on – and always unplug it when it's not actually being used.
- Remove all shiny objects from the area in which you will be working. This includes rings, watches, metal bands, tools, and glass. Reflections from the beam can be nearly as intense as the beam itself.
- Never disassemble or try to adjust the laser's internal components. Electric shock could result.